Stroage Cabinet

Product ID. QBL2N

Scan for Support
support@garvee.com

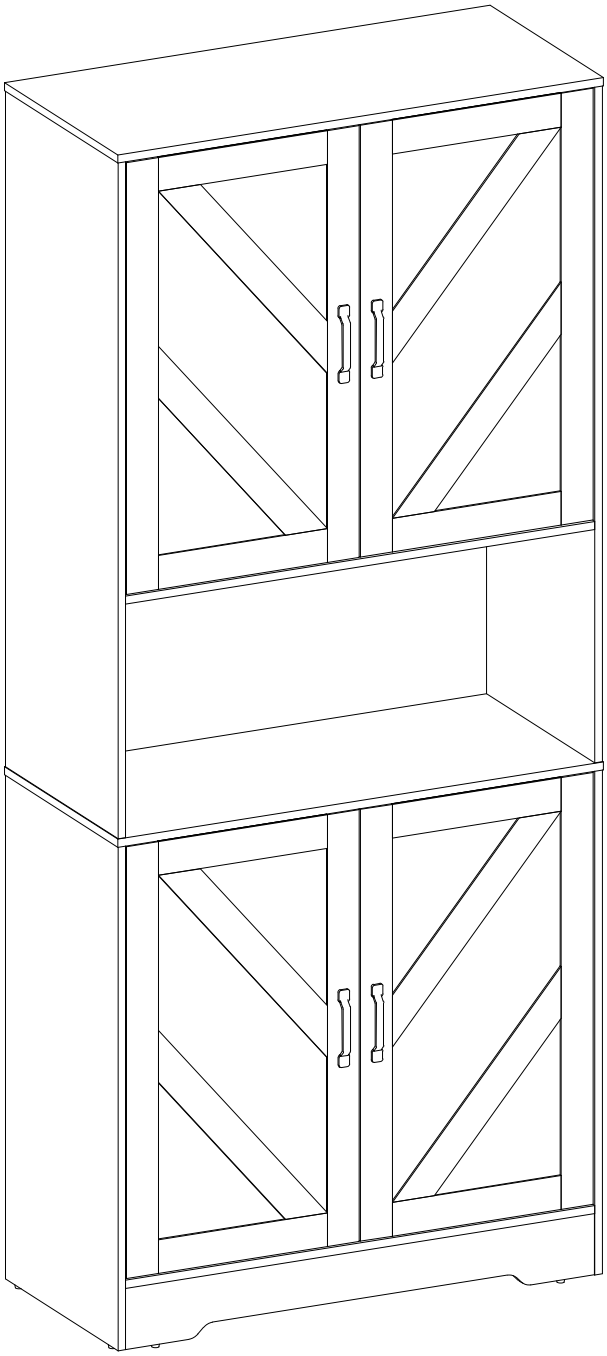

GARVEE.com

Parts List

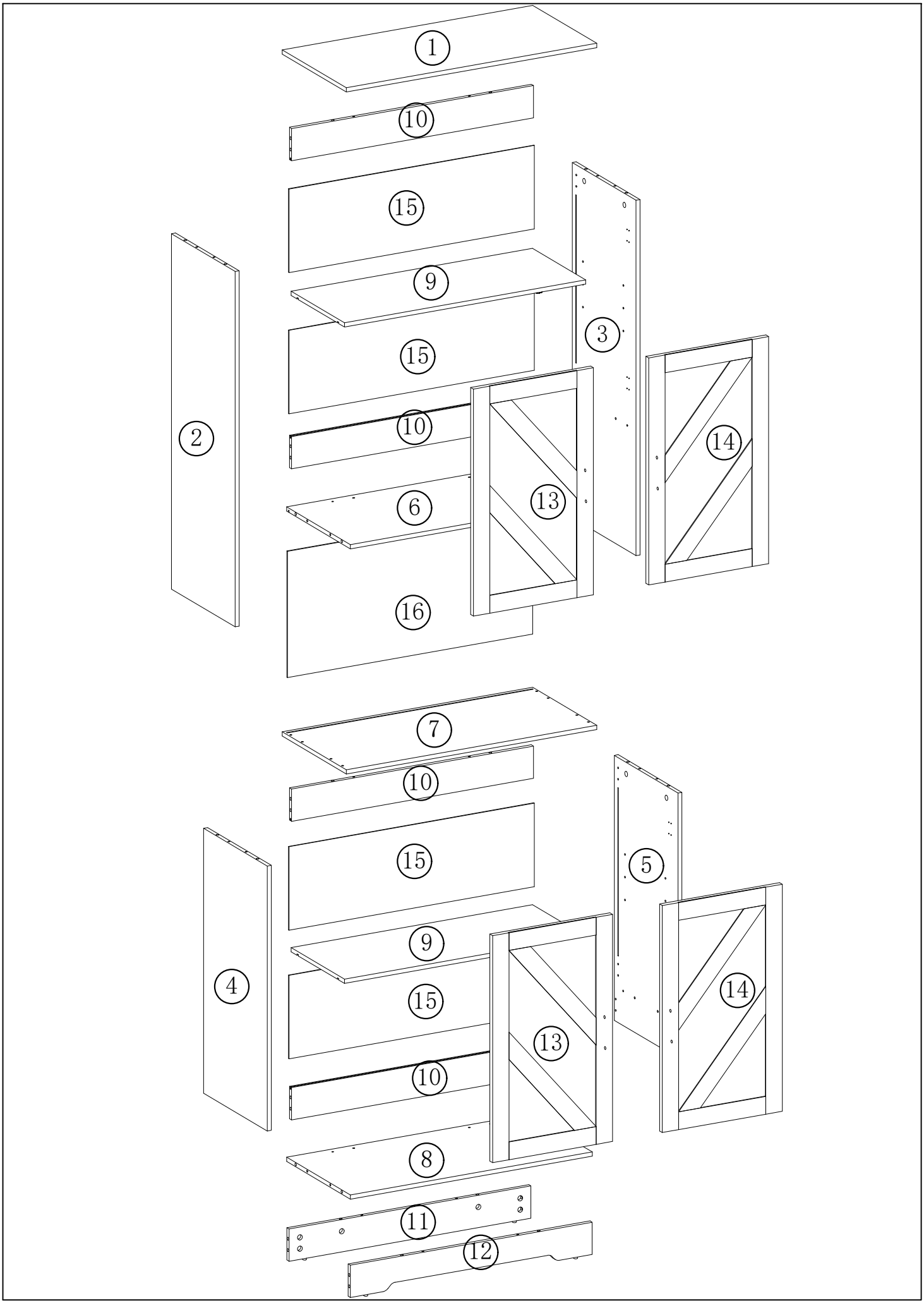

Parts List

① 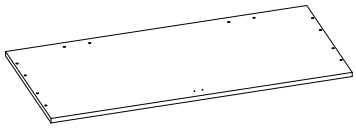 X1	② 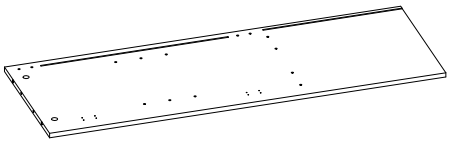 X1	③ 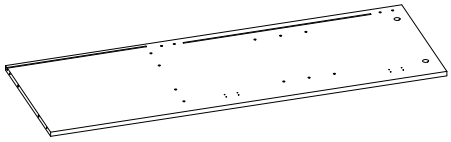 X1
④ 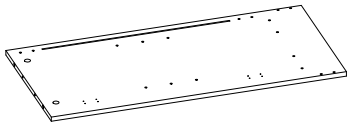 X1	⑤ 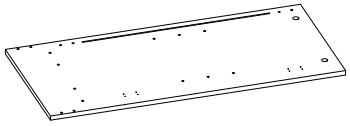 X1	⑥ 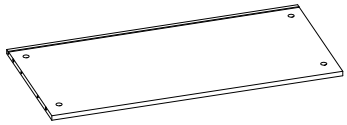 X1
⑦ 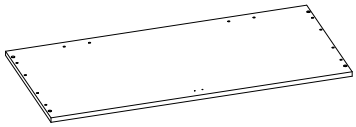 X1	⑧ 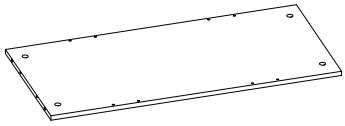 X3	⑨ 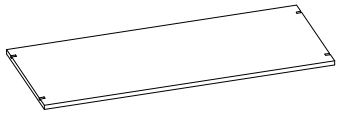 X3
⑩ 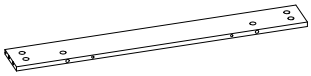 X1	⑪ 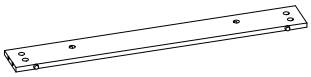 X1	⑫ X1

Parts List

13 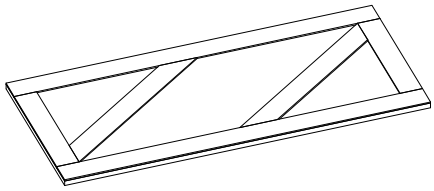 X2	14 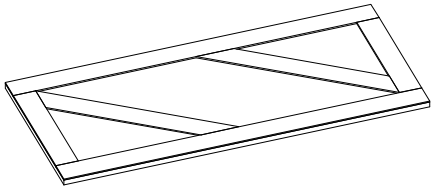 X2	15 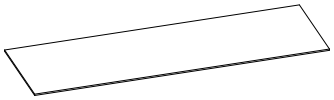 X4
16 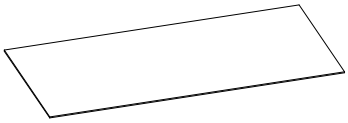 X1		

Hardware List

A KM6x40mm X52	B M15x9mm X52	C M5x40mm 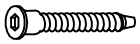 X4	D M3.5x12mm X52
E 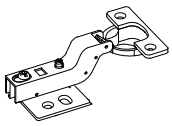 X4	F 6x50mm 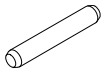 X32	G X2	H X4
I X8	J M4x20mm 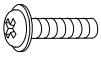 X8	K X22	L M3.5x14mm X22
M （734mm） X2	N X2	O X1	
P M4x14mm X2			

Tools required

Phillips Screwdriver

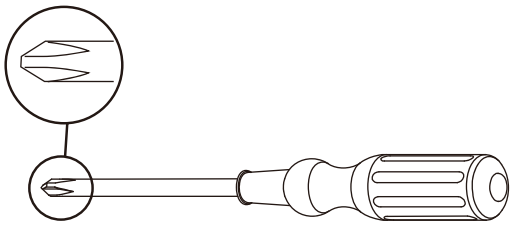

Straight Screwdriver

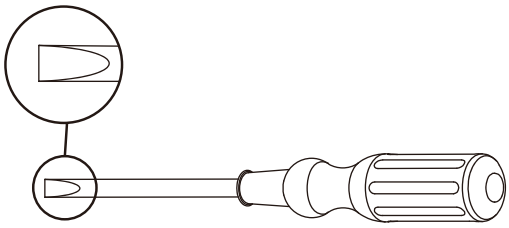

Power Tool NOT Recomemended

To ensure proper assembly we have included the following guides:

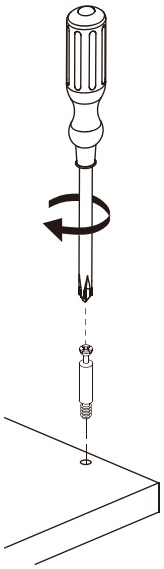

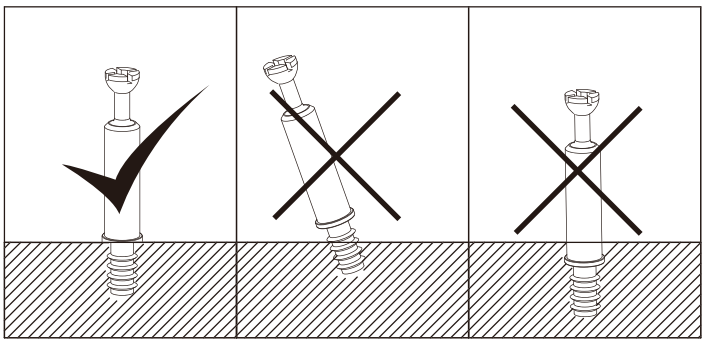

Insert threads of Locking Bolts completely，and stop once threads are no longer visible.

Do NOT overturn.

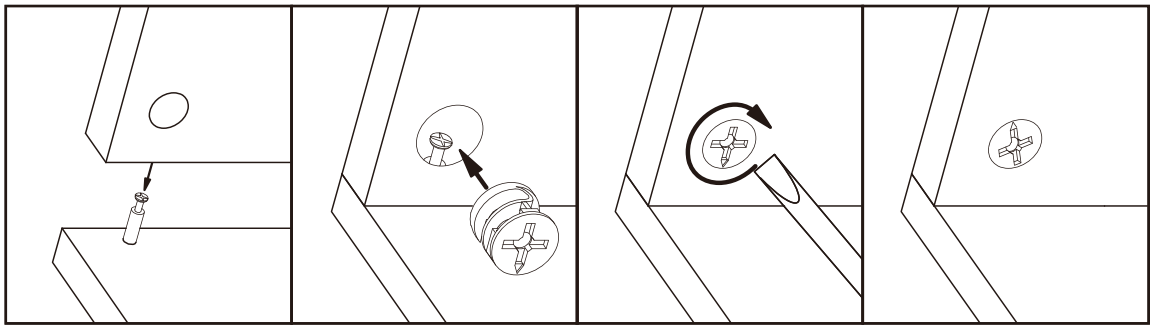

Reference this guide when assembling all Cam Locks.

Do NOT overturn.

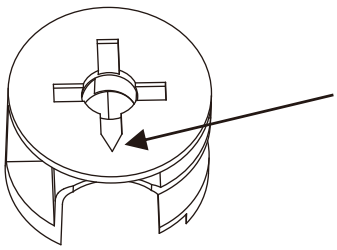

Notice:"pointer arrow"on cam face the Bolt when inserted the cam.

STEP 1

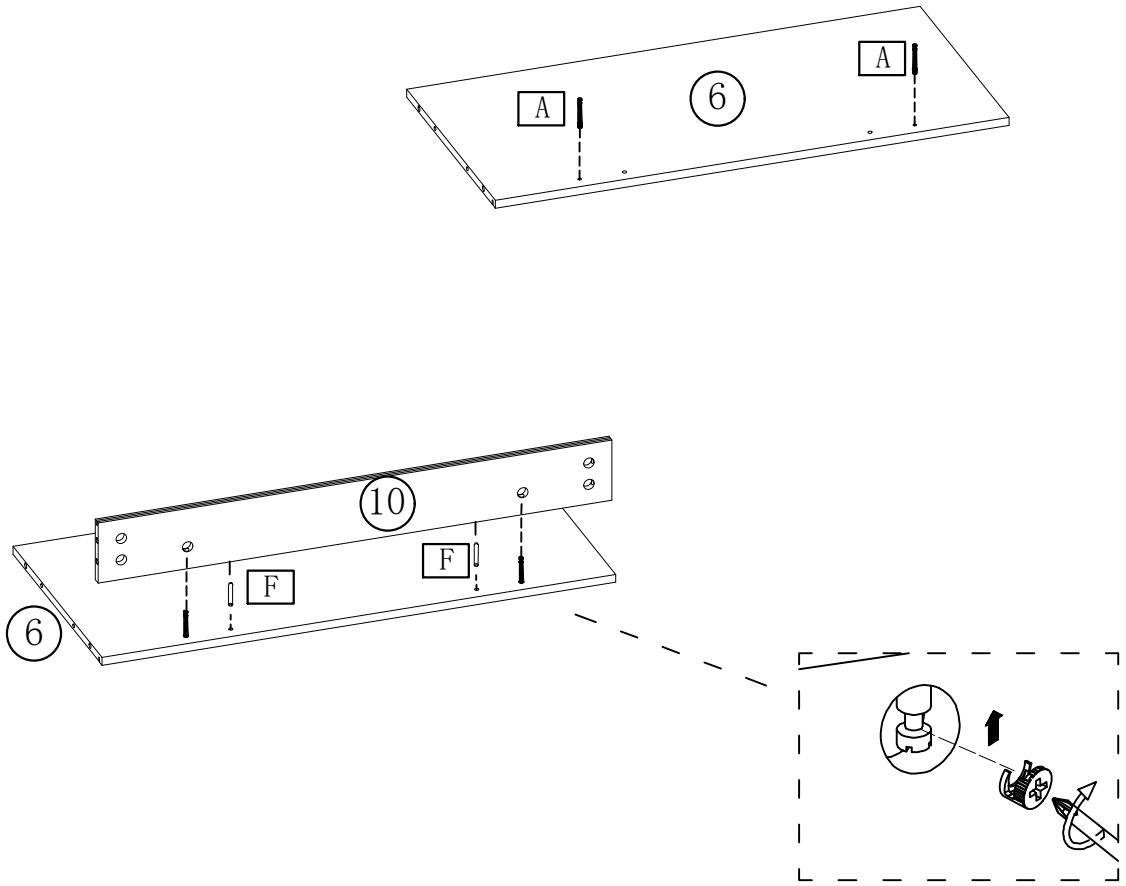

F	6x50mm *2
B	M15x9mm *2
A	KM6x40mm *2

STEP 2

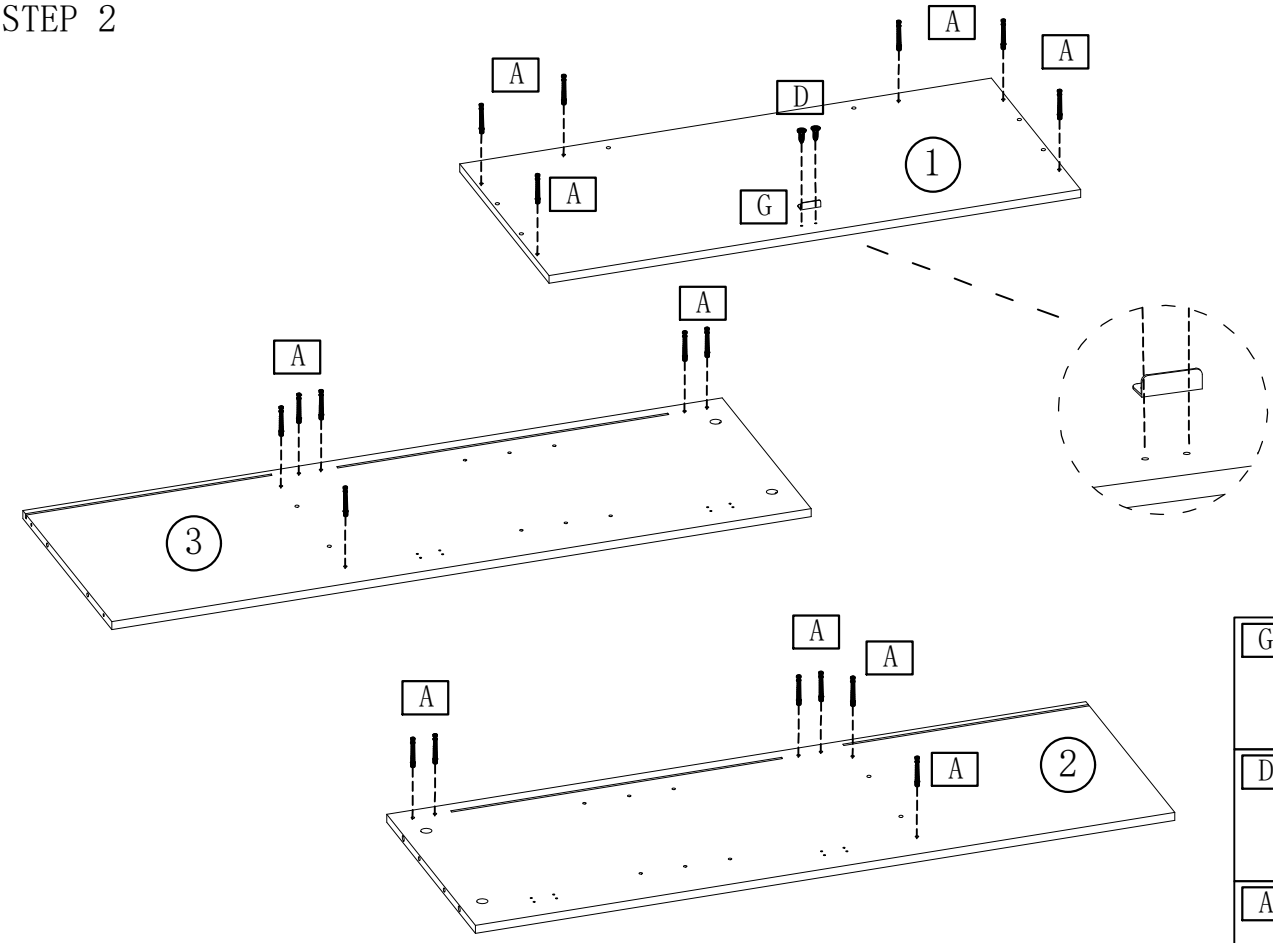

G	*1
D	M3.5x12mm *2
A	KM6x40mm *18

STEP 3

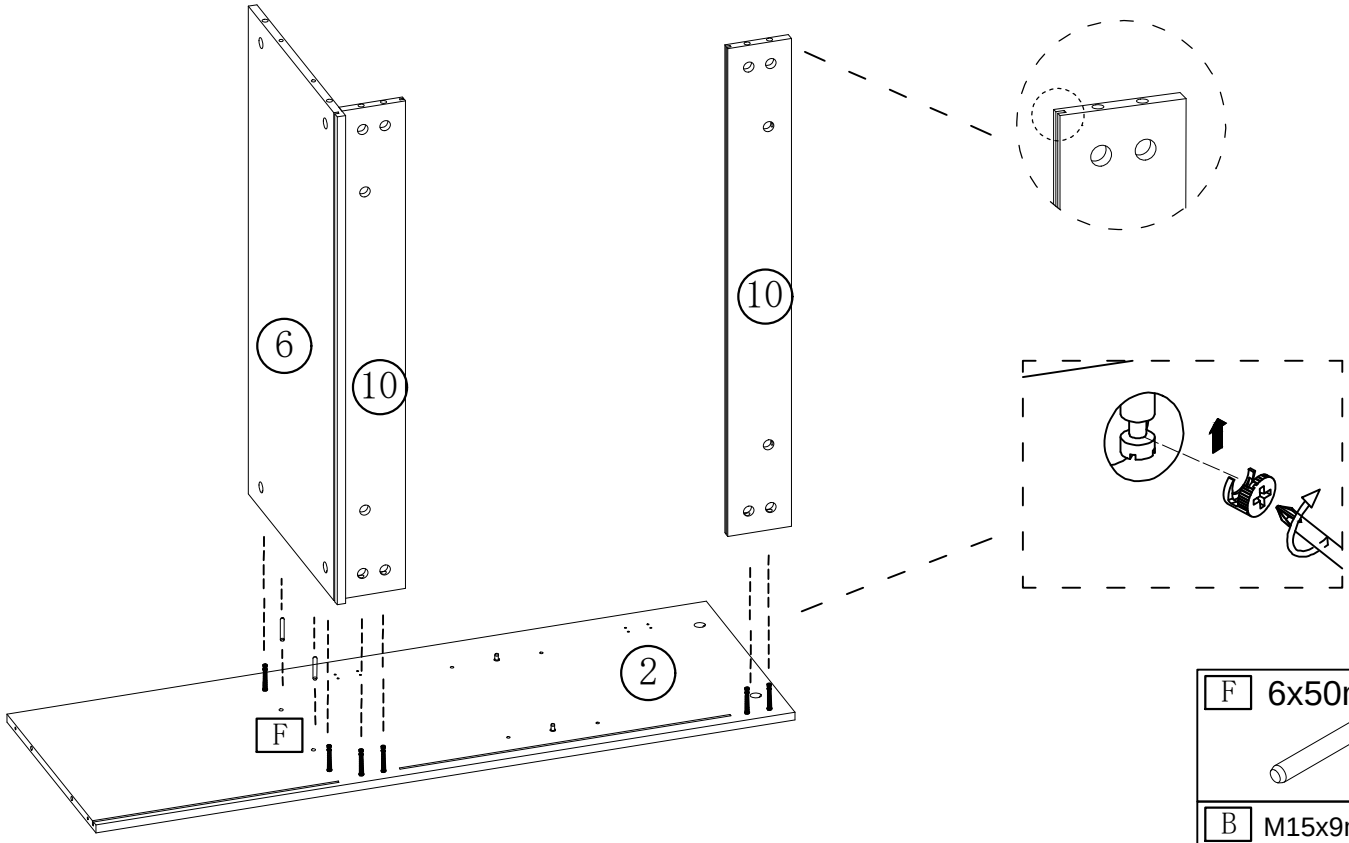

F 6x50mm

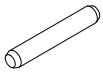

*2

B M15x9mm

*6

STEP 4

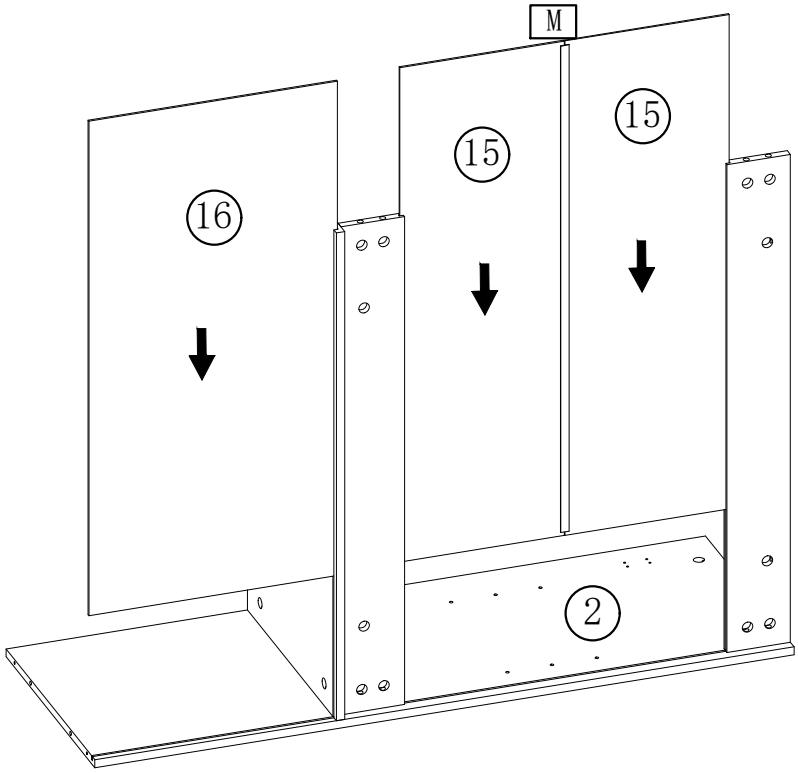

M

*1

STEP 5

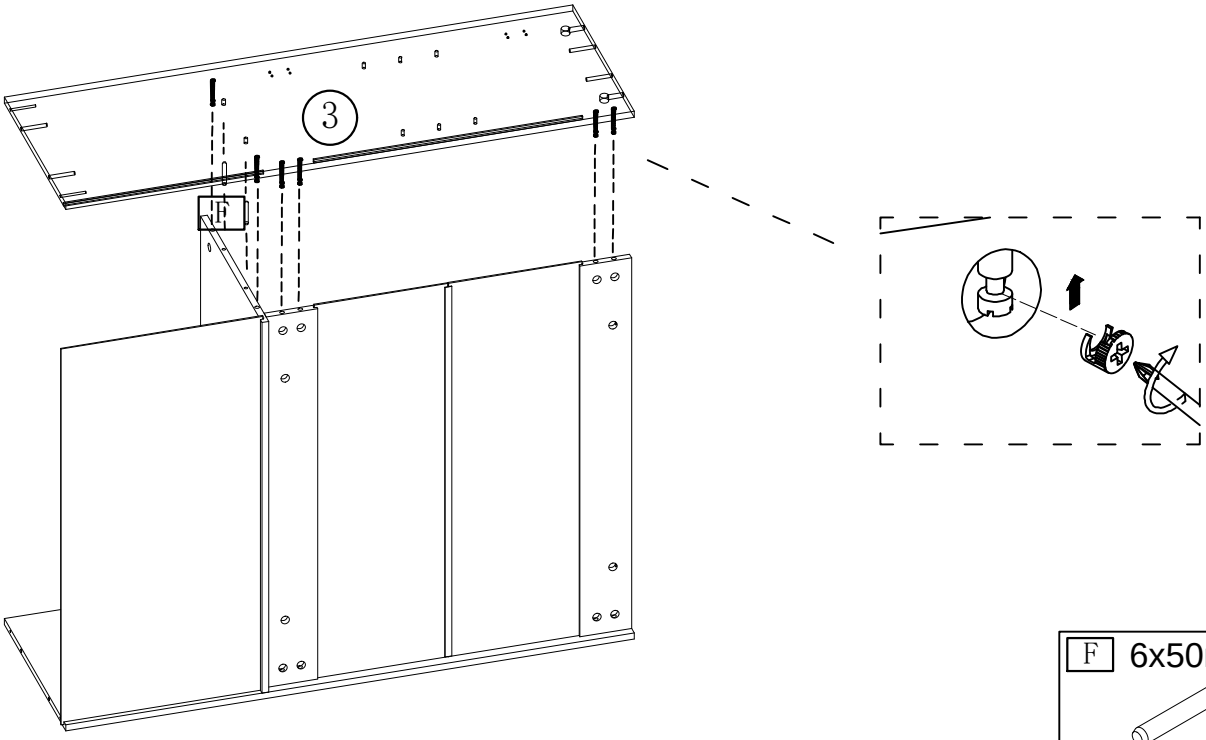

F	6x50mm *2
B	M15*9 *6

STEP 6

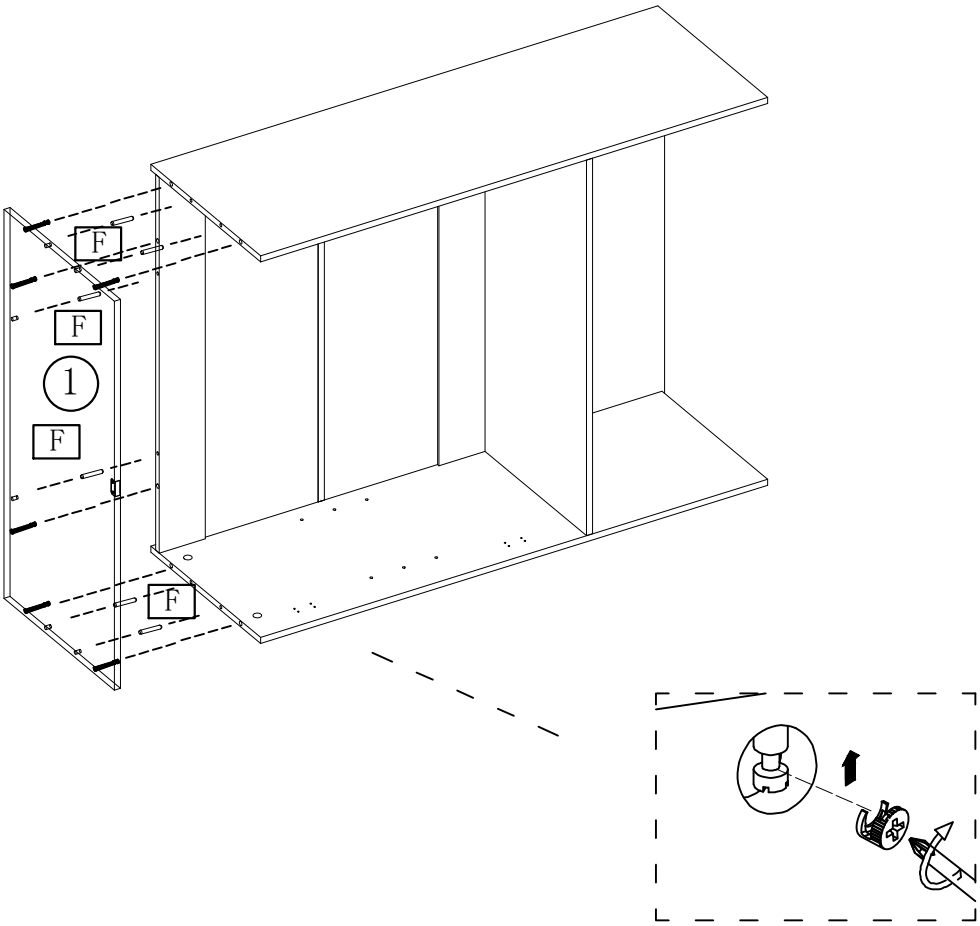

F	6x50mm *6
B	M15*9 *6

STEP 7

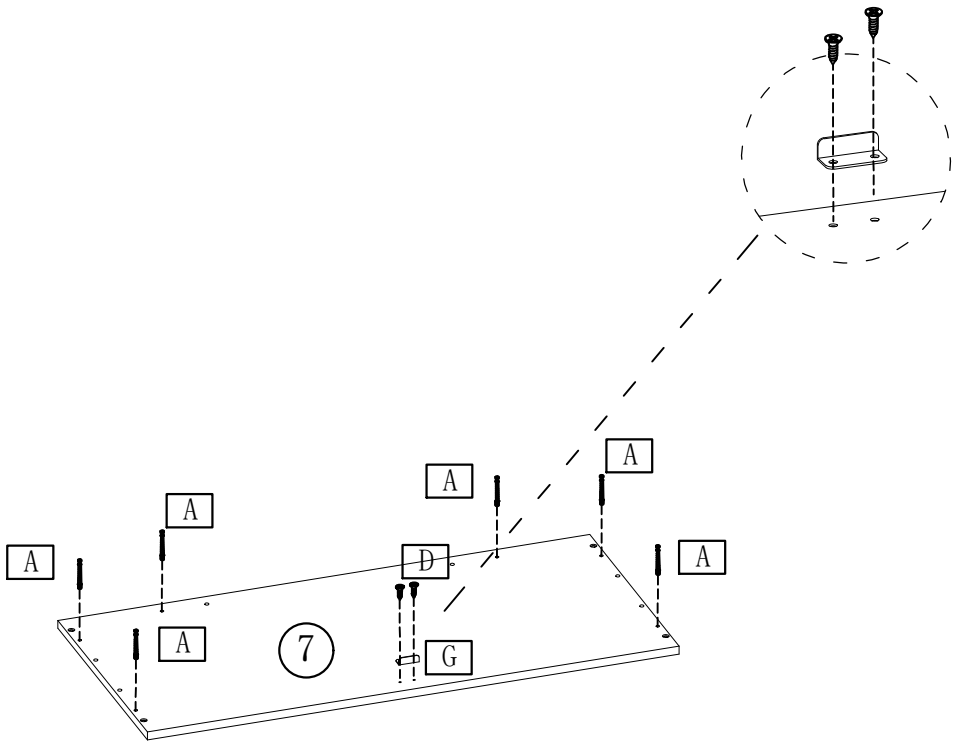

G	*1
D M3.5x12mm	*2
A KM6x40mm	*6

STEP 8

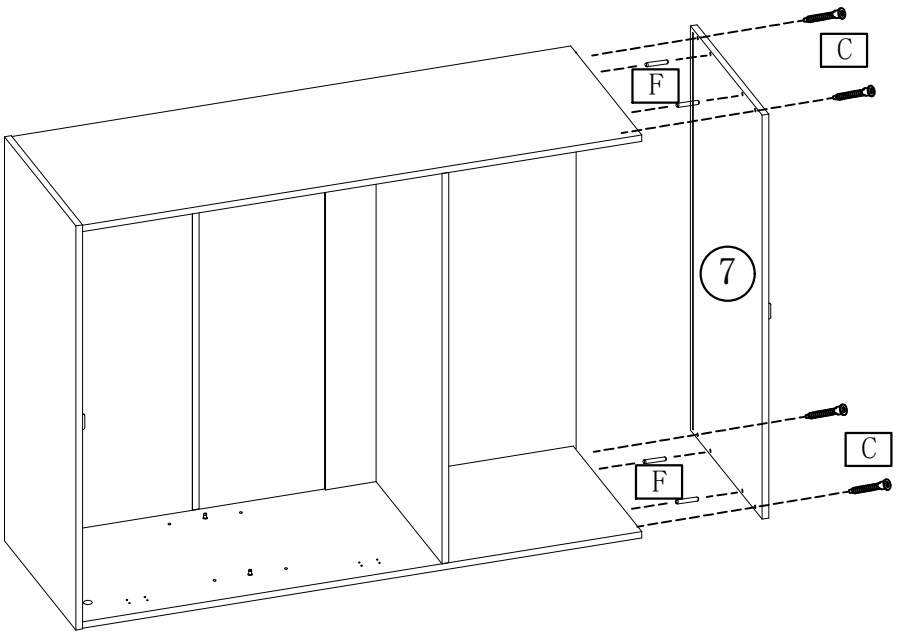

F 6x50mm	*4
C 5x40mm	*4

STEP 9

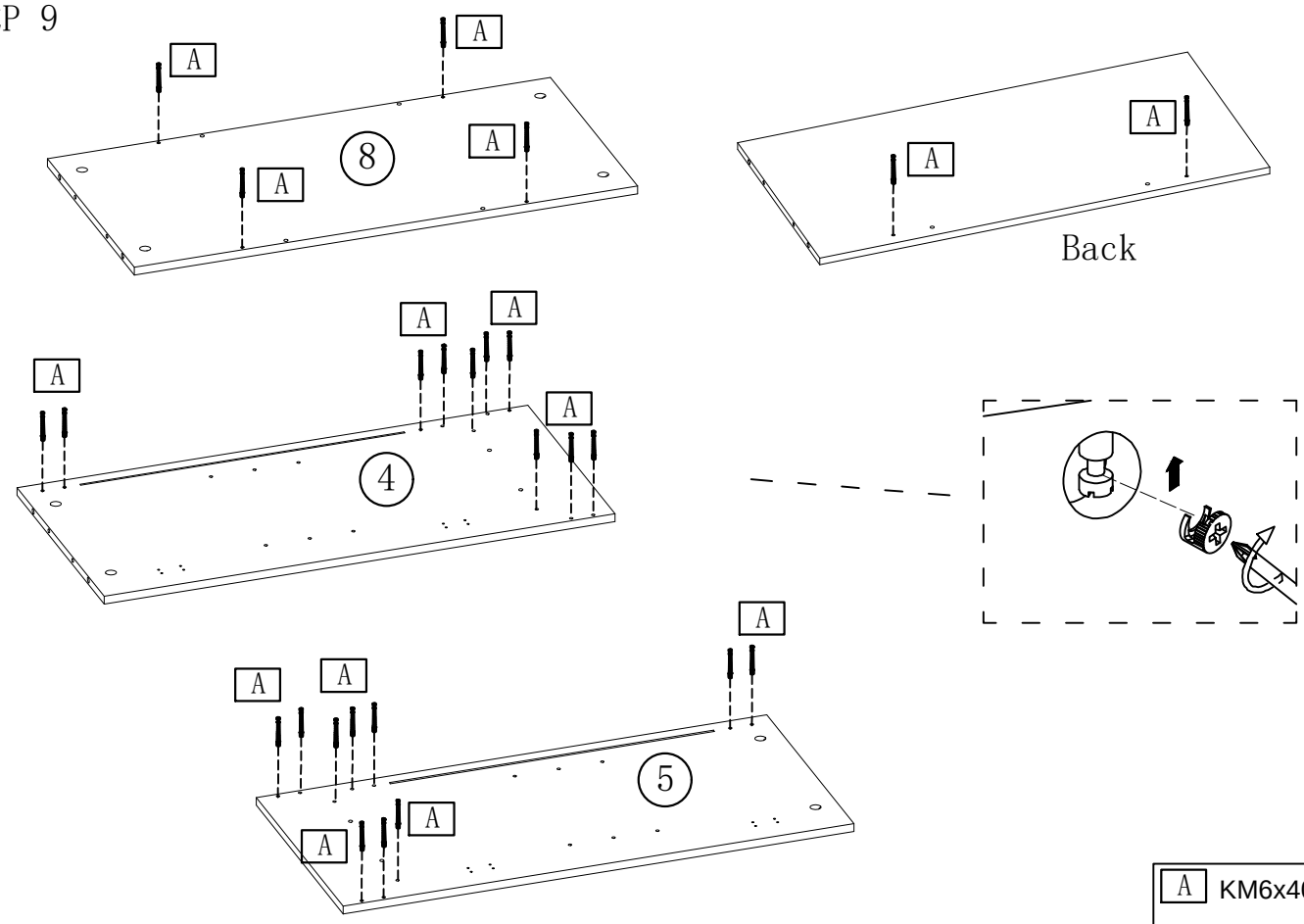

A KM6x40mm

*26

STEP 10

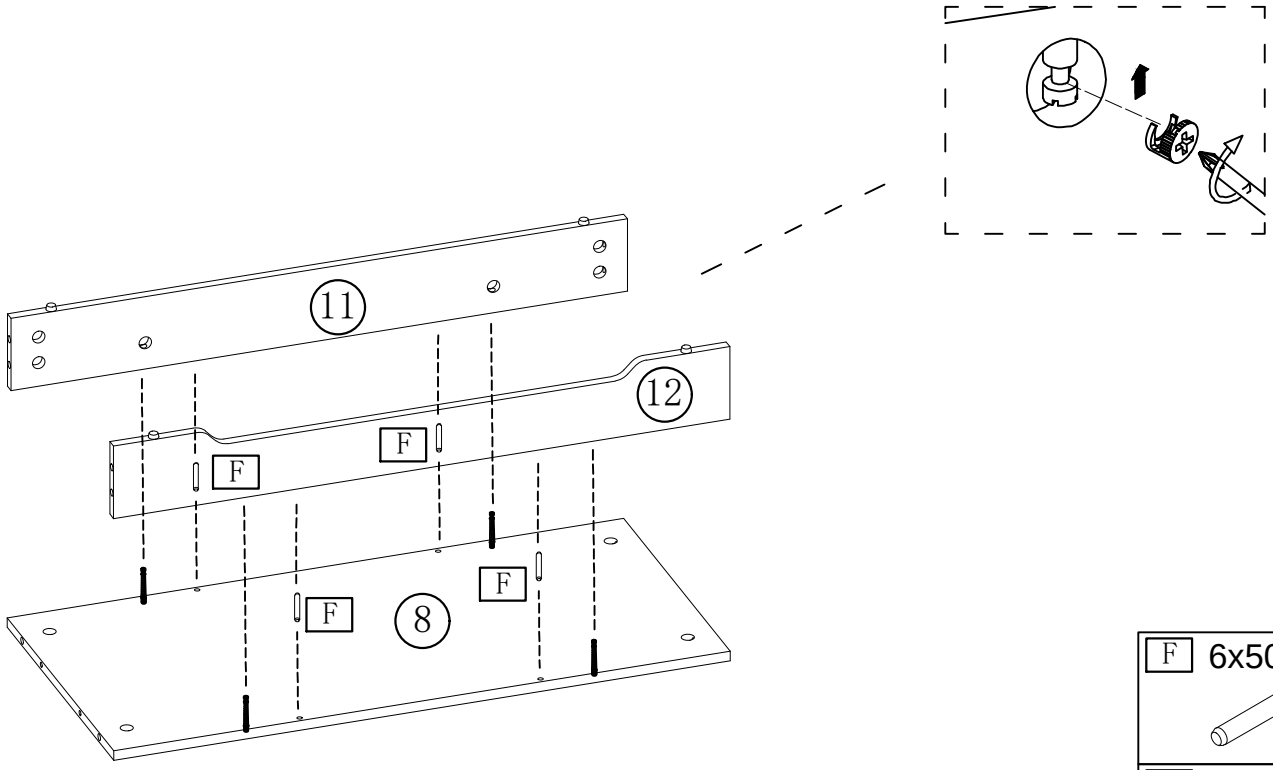

F 6x50mm

*4

B M15*9

*4

STEP 11

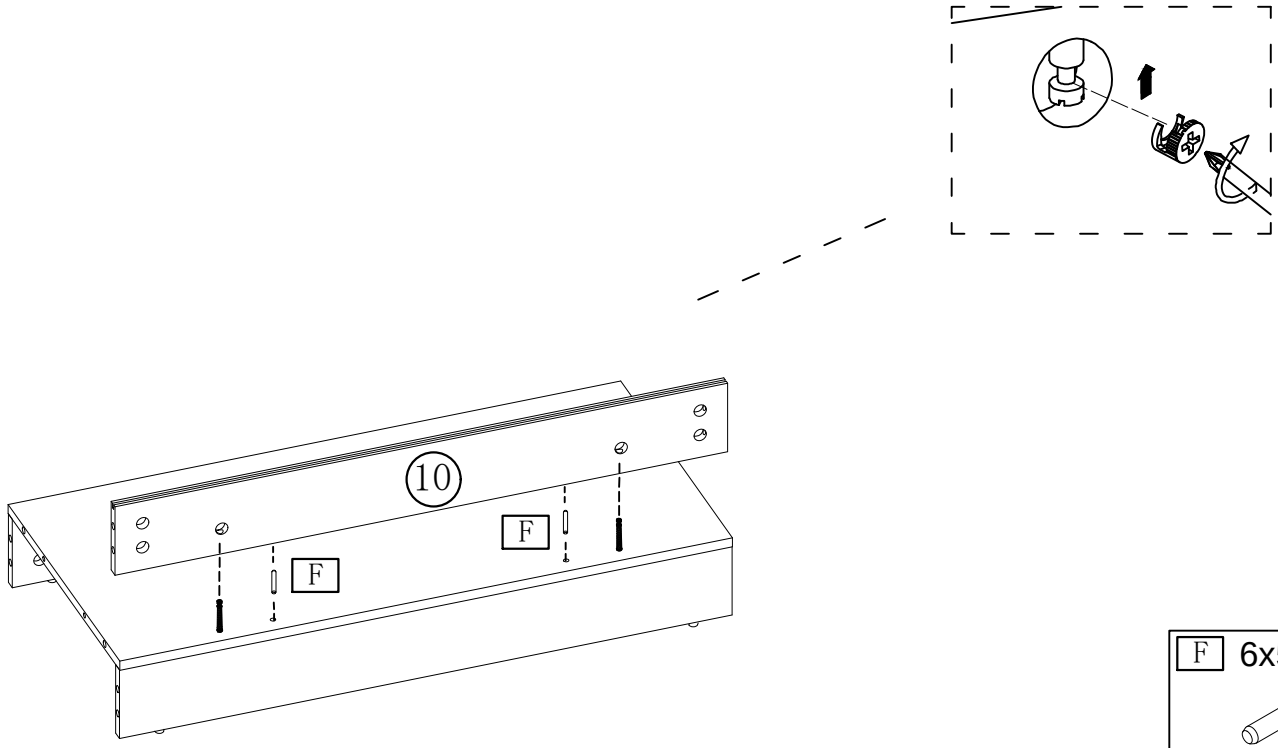

F	6x50mm *2
B	M15*9 *2

STEP 12

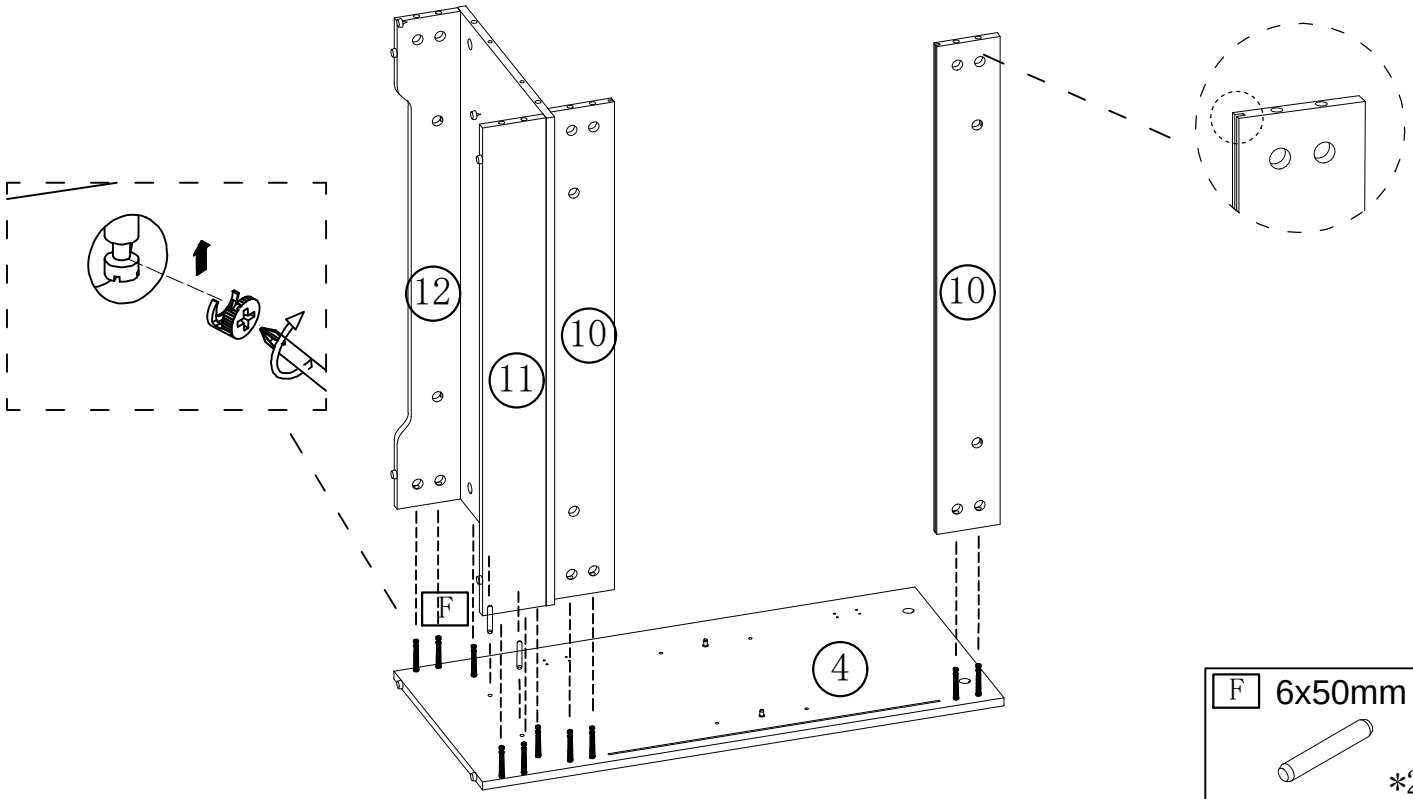

F	6x50mm *2
B	M15*9 *10

STEP 13

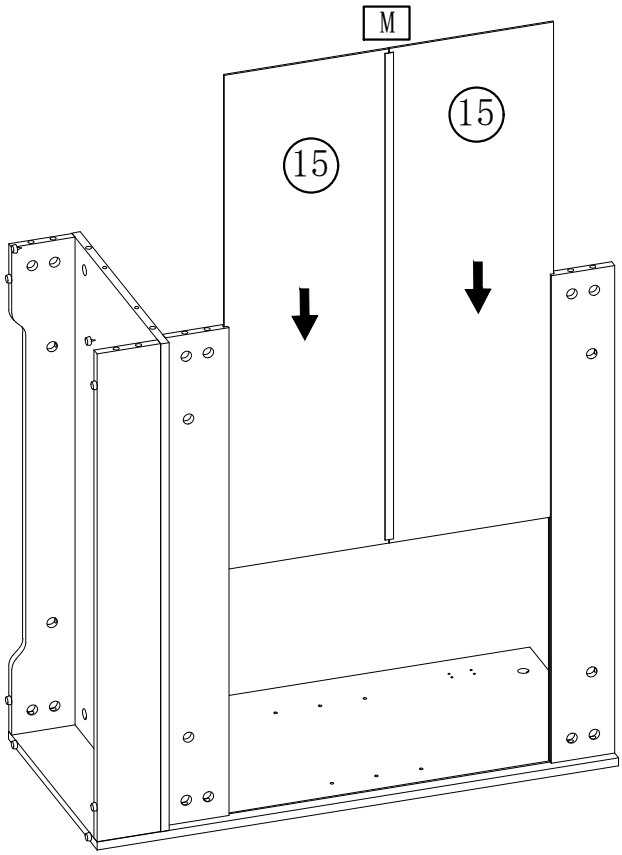

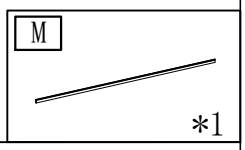

STEP 14

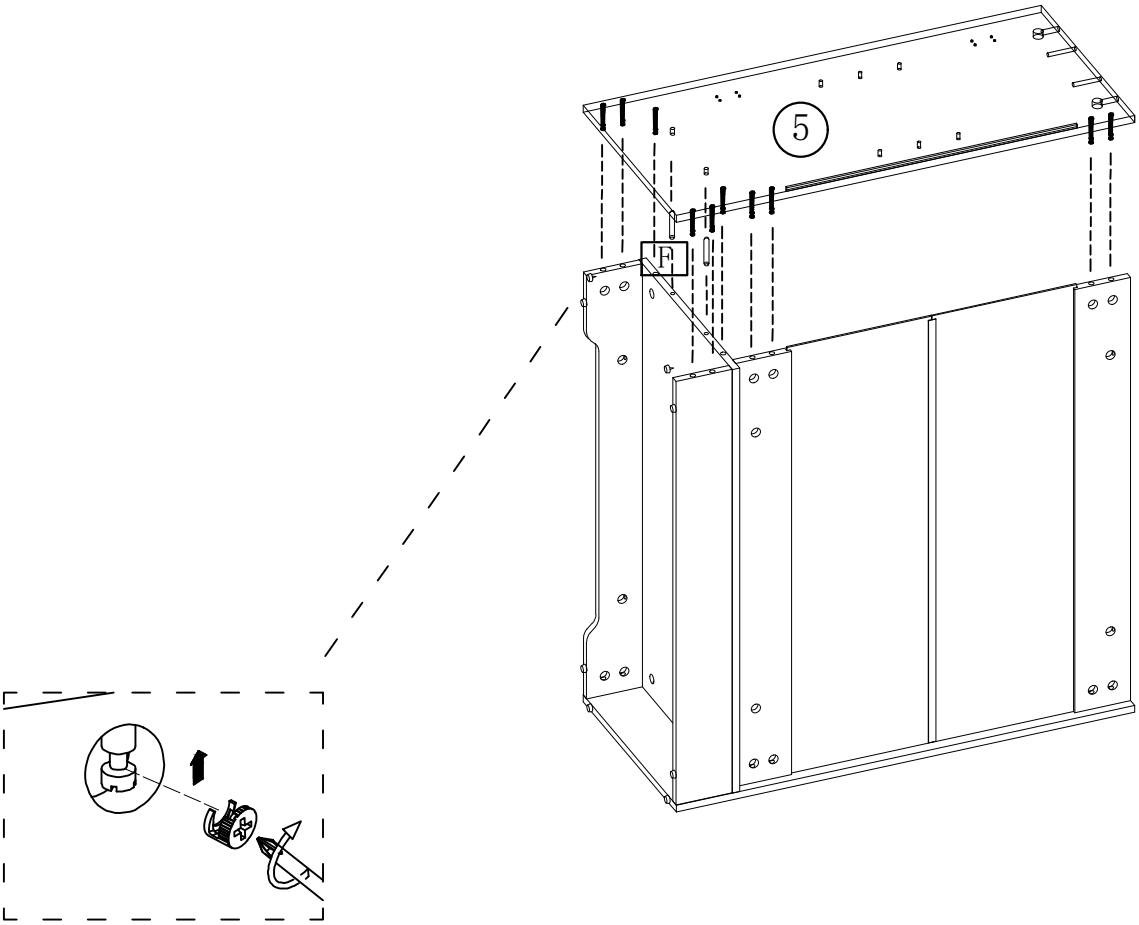

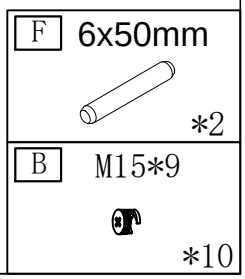

STEP 15

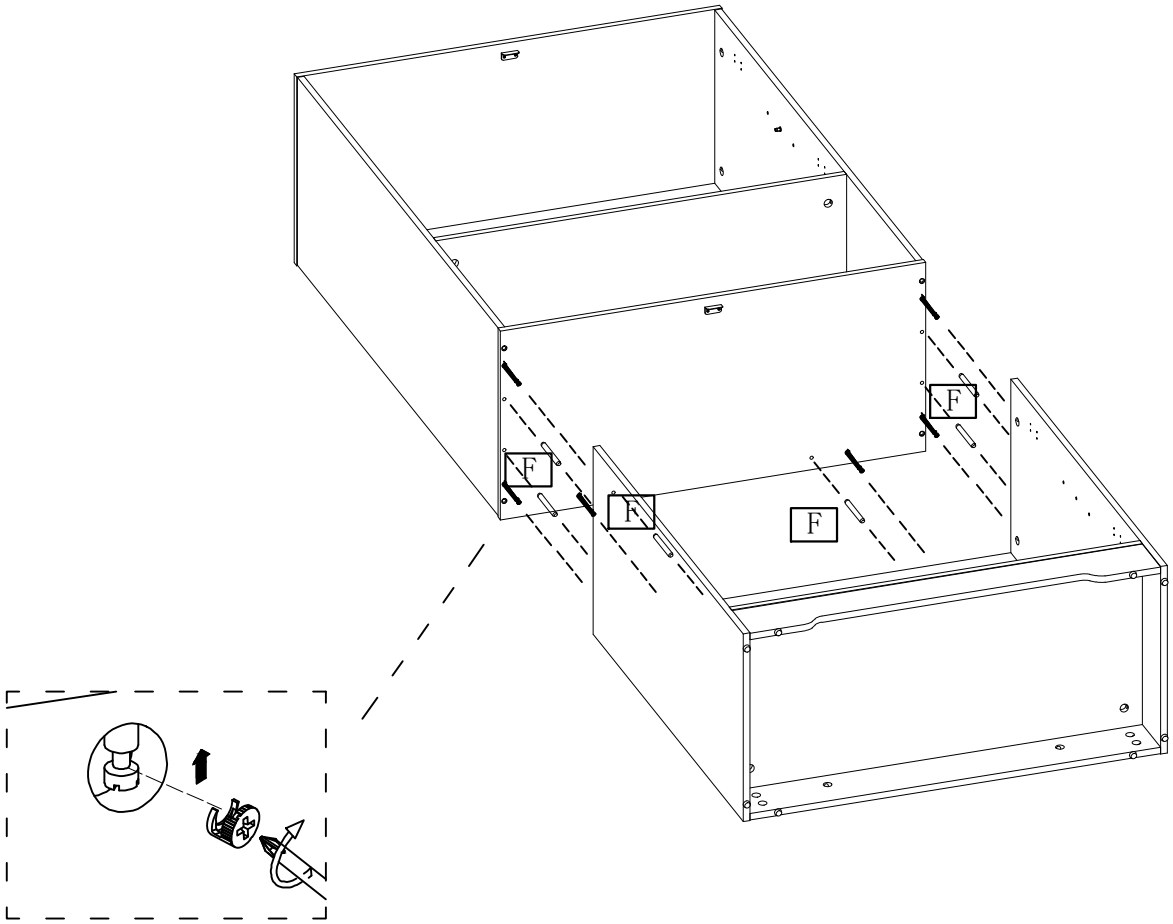

F	6x50mm *6
B	M15*9 *4

STEP 16

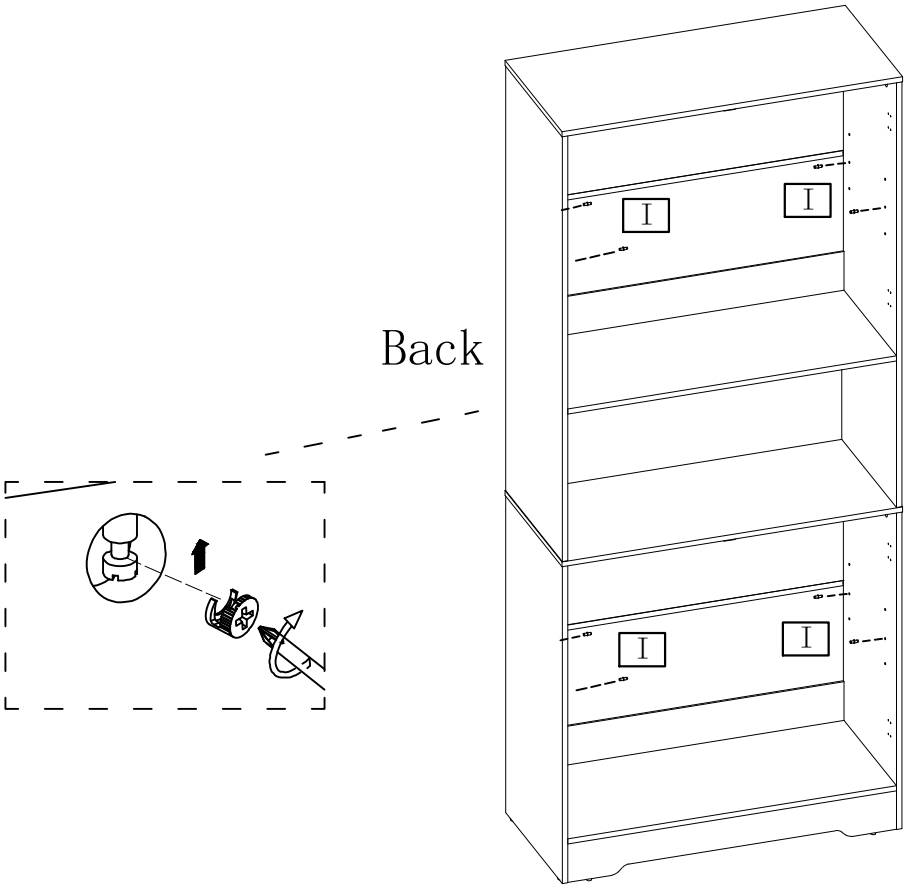

B	M15*9 *2
I	*8

STEP 17

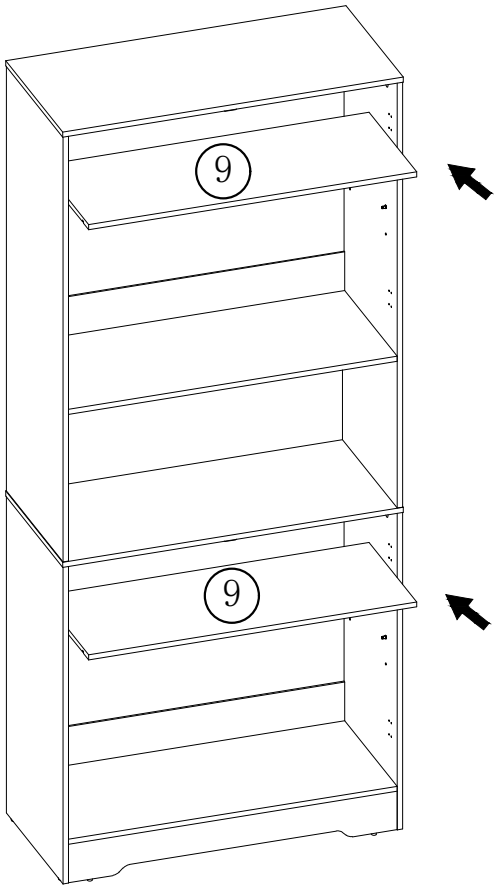

STEP 18

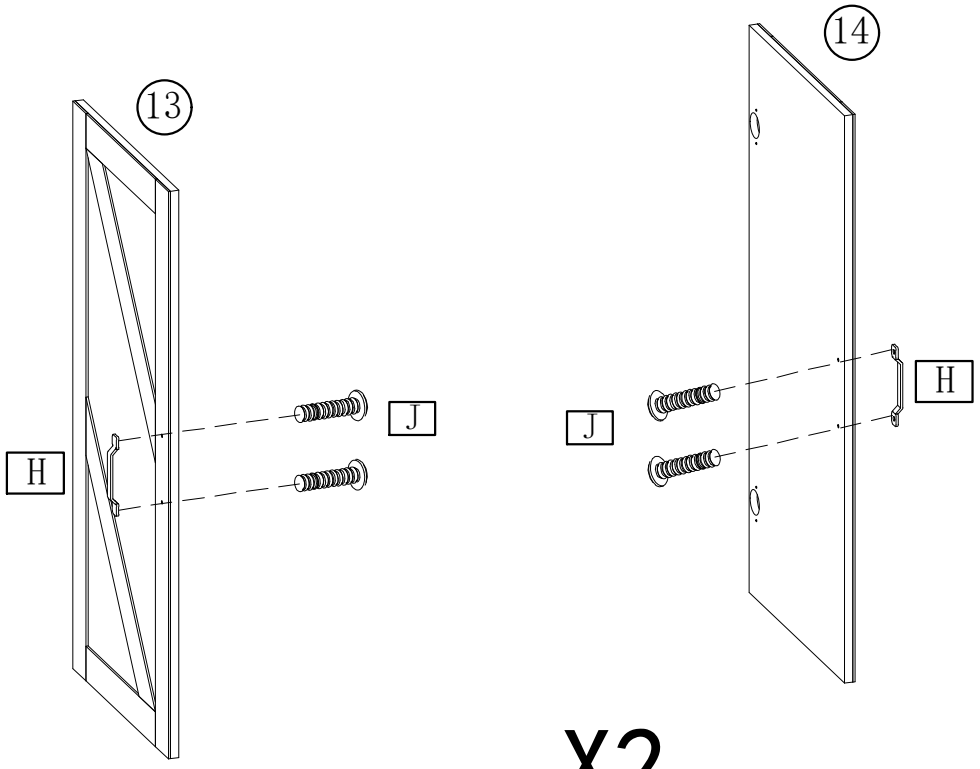

J M4*20MM

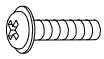

*4

H

*2

STEP 19

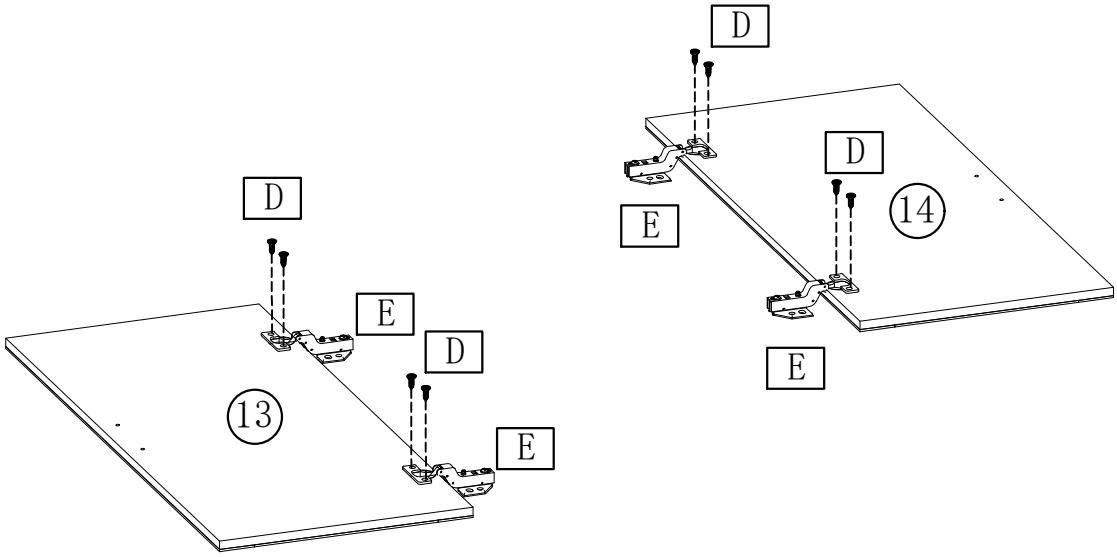

X2

E

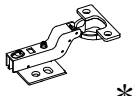

*8

D M3.5x12mm

*16

STEP 20

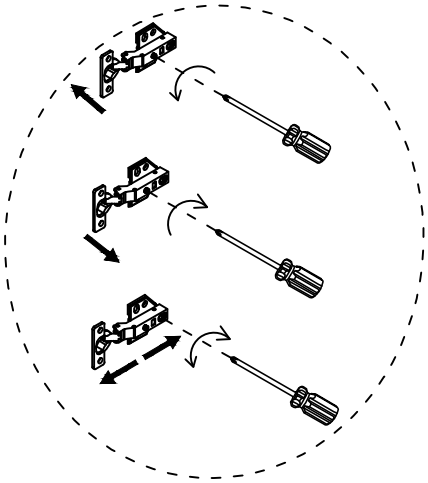

If the cabinet door is out of balance, you can adjust the hinge

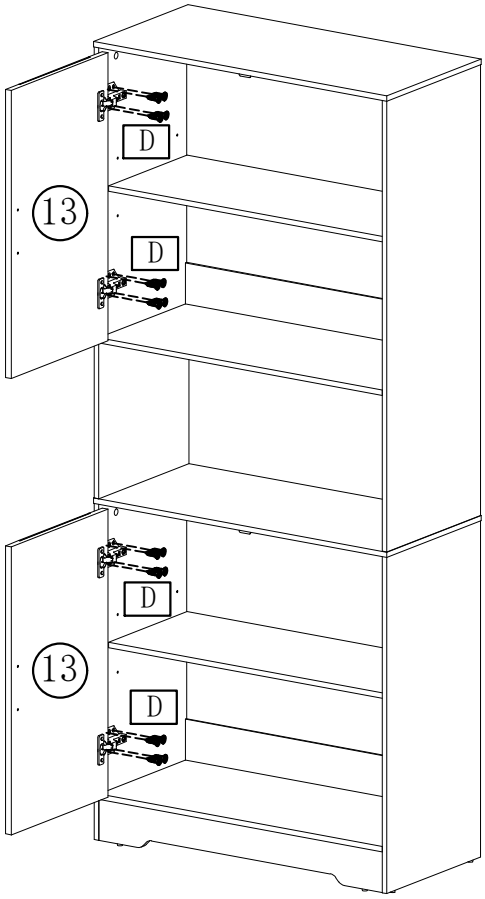

D M3.5x12mm

*16

STEP 21

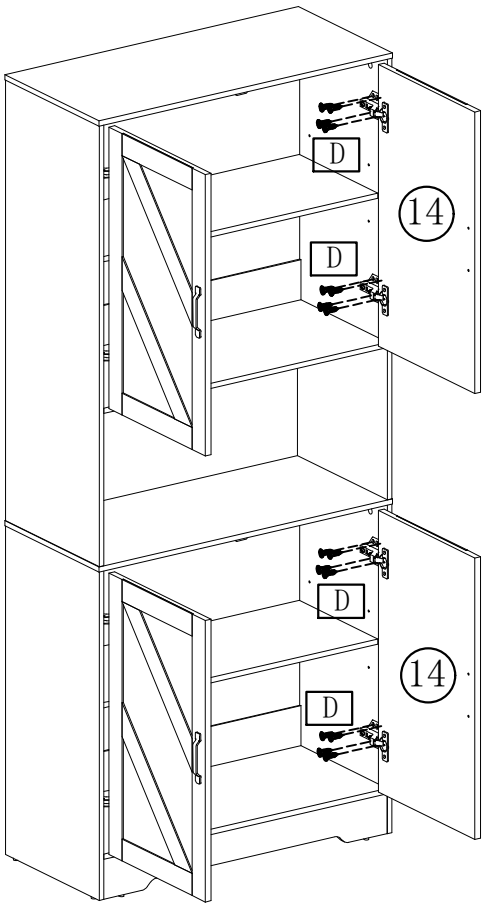

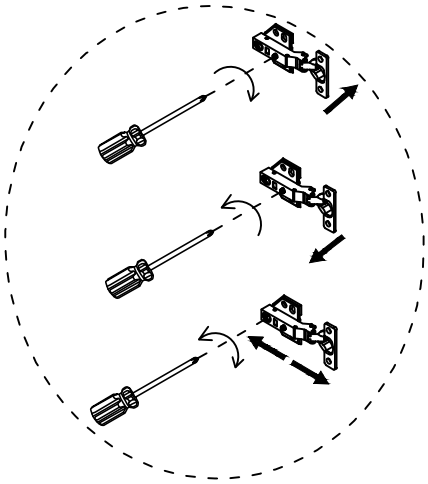

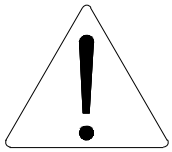

If the cabinet door is out of balance, you can adjust the hinge

D M3.5x12mm

*16

STEP 22

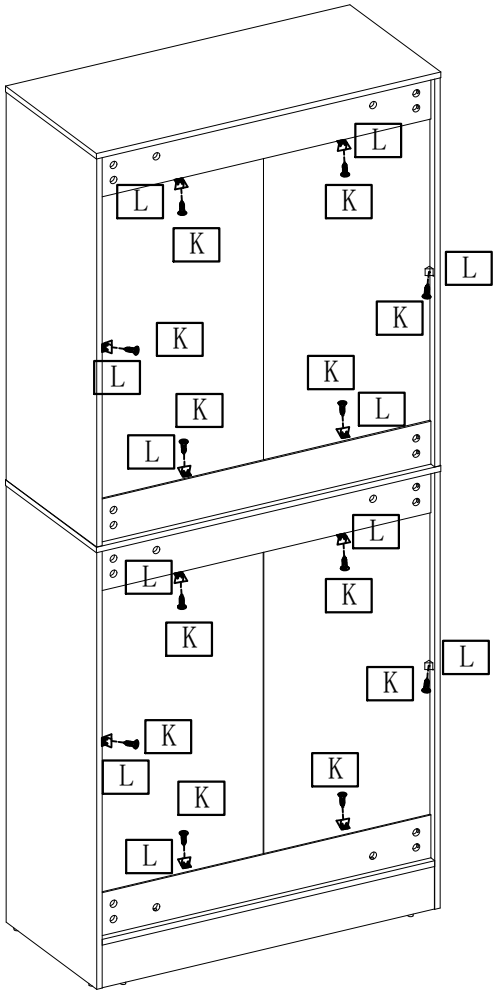

L M3.5*14

*22

K

*22

STEP 23

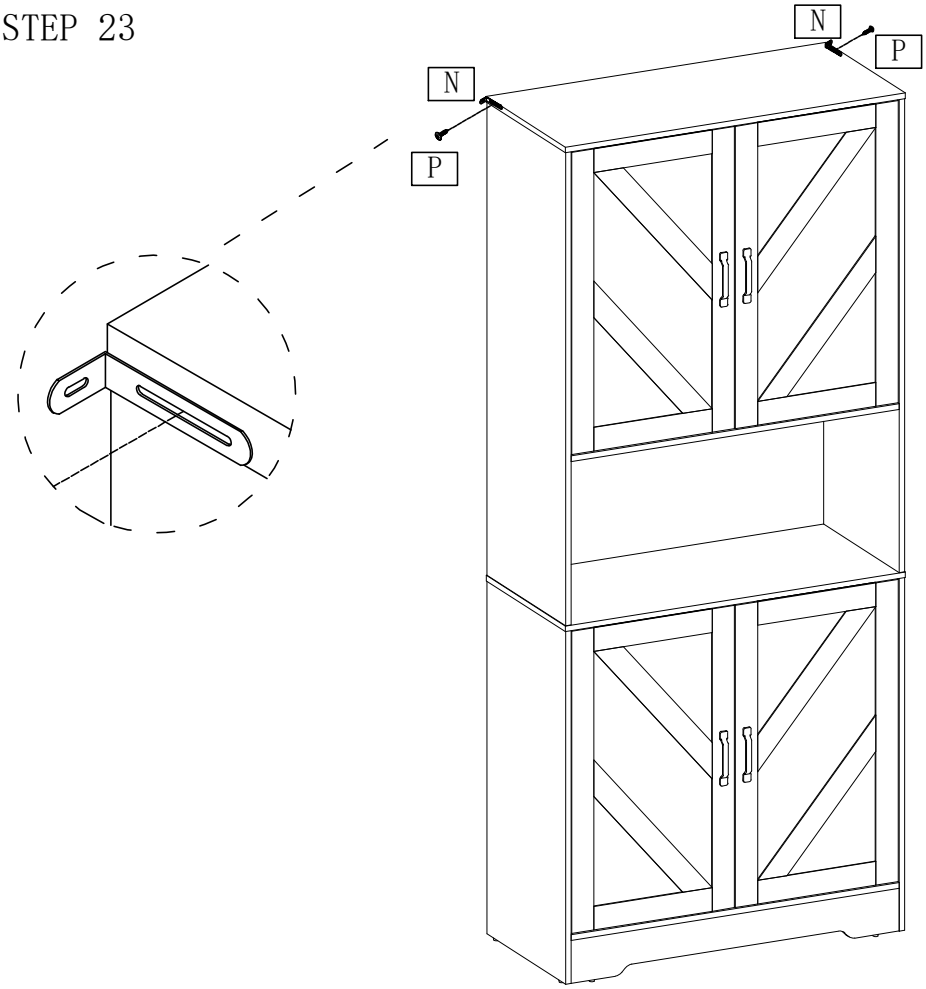

P	M4*14 *2
N	*2

STEP 24

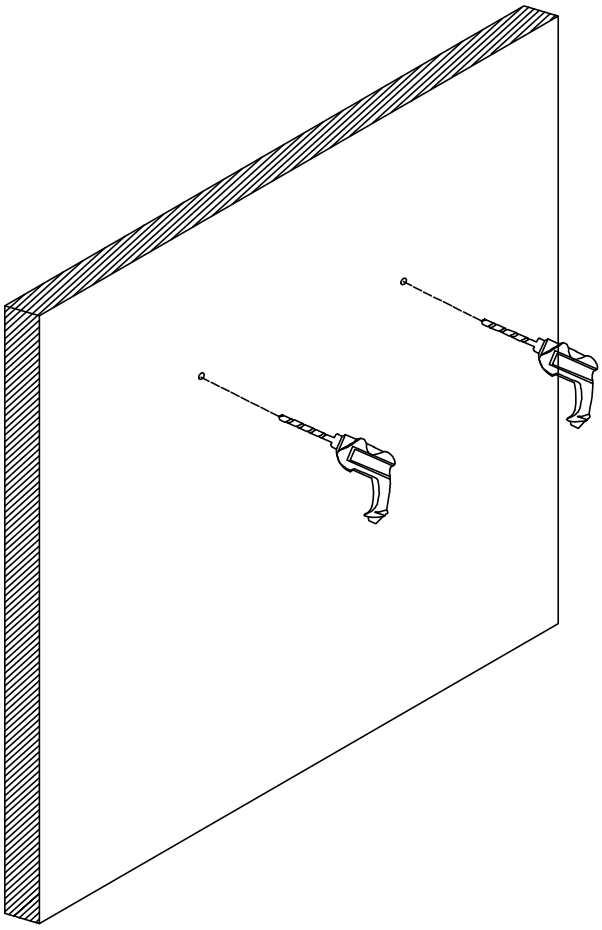

STEP 25

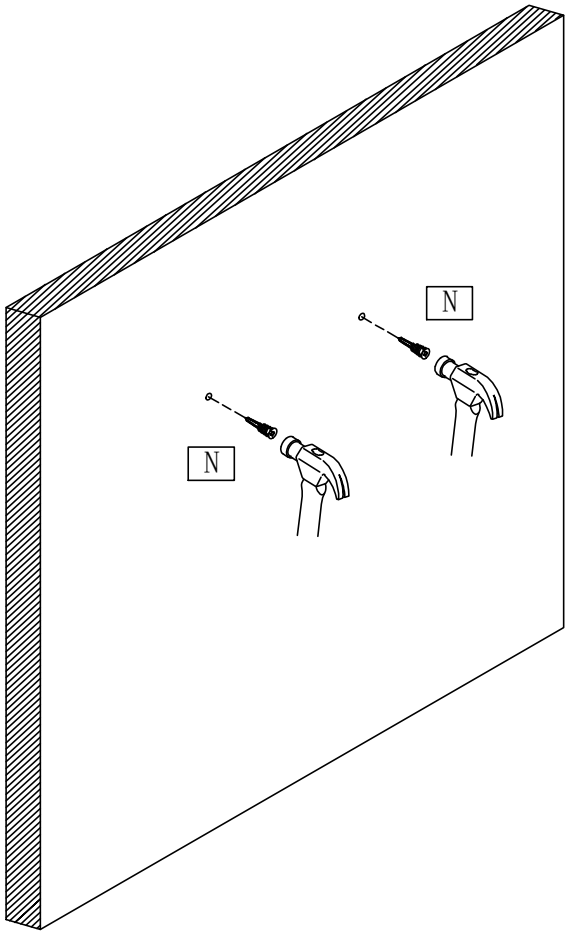

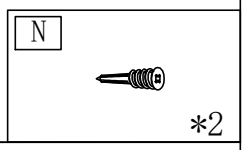

STEP 26

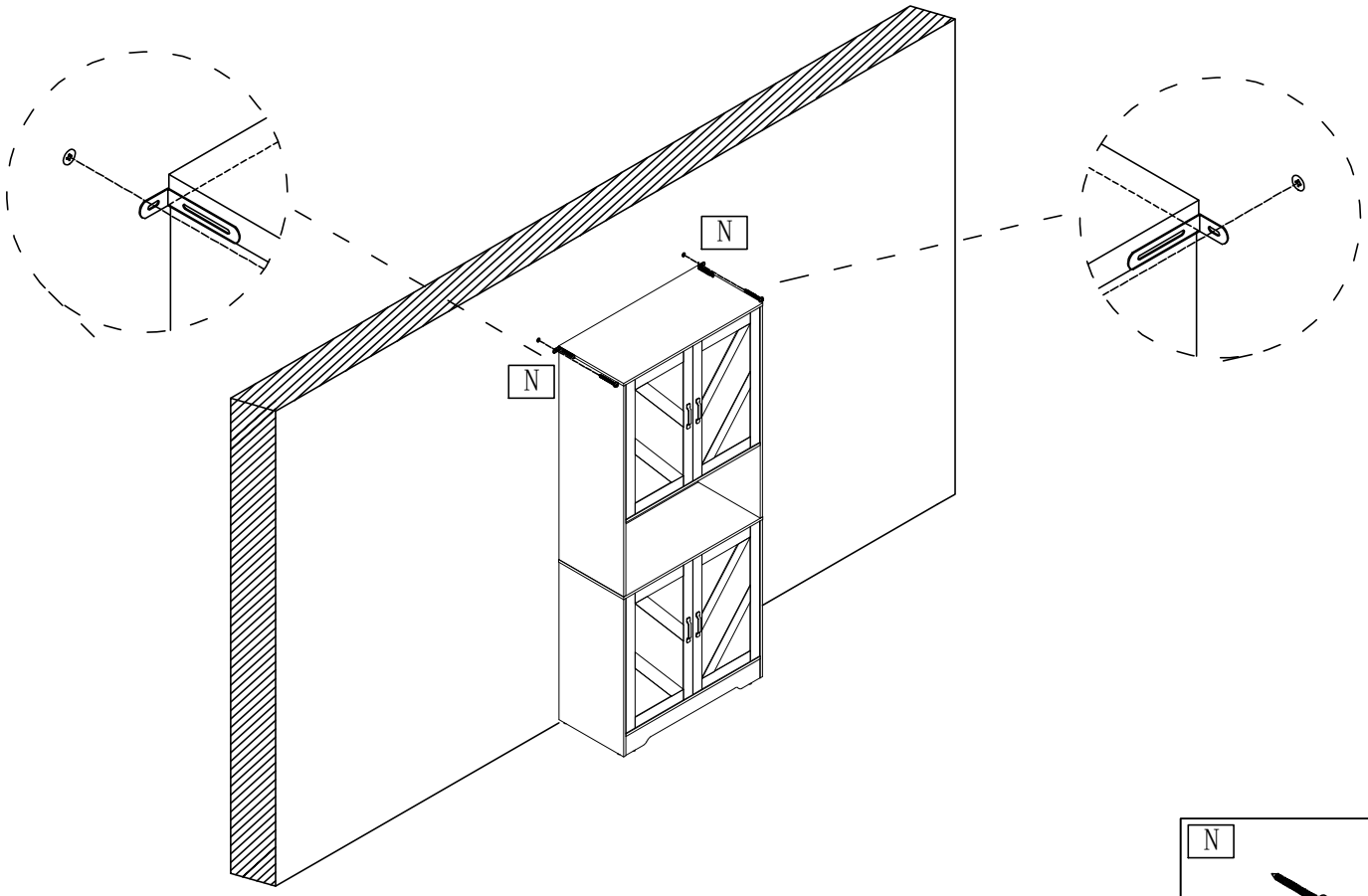

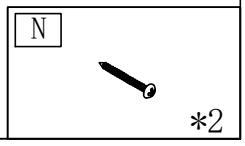

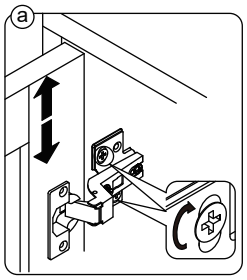

To adjust the door vertically loosen the screw as shown and move up and down as needed.

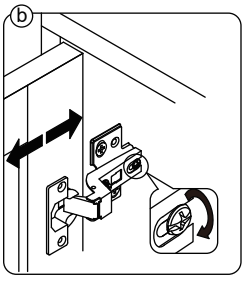

To adjust the gap from the door to the main frame turn the screw clockwise or anti-clockwise as needed.

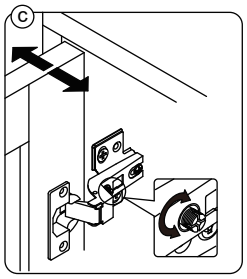

To adjust the door laterally adjust the screw as shown by turning clockwise or anti-clockwise.

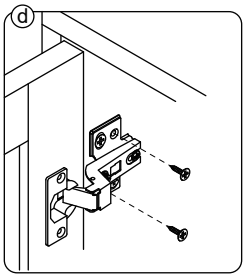

Please fix other screws.

WARNING

Children have died from furniture tipover.
To reduce the risk of furniture tipover:

- ALWAYS install tipover restraintprovided.
- NEVER put a TV on this product.
- NEVER allow children to stand,climb or hang on drawers,doors, or shelves.
- NEVER open more than one drawer at a time.
- Place heaviest items in thelowest drawers.

CONTACT US

Dear customer , thank you for purchasing our products !
We are proud to present our customers with high quality products !

If you have any product quality or use problems ,please contact our customer service by email ,we will ensure your satisfaction .

support@garvee.com